Track-It™
Extreme Temperature Data Loggers

Description

The Track-It™ Extreme Temperature Data Loggers are battery powered stand alone data loggers that record up to 30,000 samples of temperature data. The units are easily configured using the included Track-It™ Software. Simply plug the logger into the Extreme Logger Reader which connects via a standard USB cable to any open USB port on your PC and the Track-It™ Software automatically identifies the logger. The Logger communicates via the Extreme Logger Reader without opening the logger so long term integrity of the housing is ensured. The Track-It™ Extreme Temperature Logger housing is made of 316L Stainless Steel and meets IP68 rating standards. Set the unit up to start or stop recording immediately, at a predetermined time and date, or only at certain temperature values. The sample storage rate can be set from 1 sample every 2 seconds up to 1 sample every 24 hours. The on board data storage is non-volatile so data will not be lost in the event of a depleted battery.

Features

- **Up to 30,000 samples per record**
- **Alarm set points allows graphical visualization of excursions**
- **Compact size allows for easy placement in any application**
- **21 CFR Part 11 compliant software included**
- **9 Point N.I.S.T. certificate included**
- **–58 to 302°F/-50 to 150°C temp range**
- **Extended Range for probe Tip –70 to 300°C**
- **0.1°C accuracy and excellent repeatability**
- **Accurate internal clock (1 minute/year)**
- **MKT calculation over an entire data file or selected time intervals**
- **Flexible and fixed Sensors**
- **Simple Setup and Deployment**
- **RTD technology provides superior accuracy over wide temperature range**

Typical Uses

- **Validation**
- **Medical Device Sterilization**
- **Steam Heat Sterilization**
- **Autoclave Sterilization**
- **Ovens/Chambers**
- **Refrigerators/Freezers**
- **HACCP Implementation**
- **Pasteurization**
- **Food and Beverages**
- **Uniformity Mapping**
- **Pharmaceutical Processing**
- **Storage**

MONARCH INSTRUMENT

21 CFR Part 11 Compliant

CE

Find Quality Products Online at: www.GlobalTestSupply.com sales@GlobalTestSupply.com

Track-It™
Extreme Temperature Data Loggers

Applications

Sterilization

Sterilizers require great accuracy, stability, and repeatability of temperature measurement. Track-It™ Extreme Loggers are calibrated using a thorough and exhaustive routine to give phenomenal results in these critical areas. Trust your data to be of the highest quality and reliability in all applications such as sterilizations of different products. Fully validate sterilizers uniform load temperatures with all varieties of shapes and types of insertion and removal designs.

Autoclaves

Track-It™ Extreme Temperature Loggers are the perfect solution for your autoclave validation and thermal mapping requirements. Track-It™ Extreme Temperature Loggers are ruggedized to withstand harsh environments and pressures up to 10 Bar with an IP68 rating. Use single and dual channel versions for economic uniformity and exact product temperature records.

Ovens

Oven temperature mapping, validation, uniformity test, and continuous measurement and recording is made simple and reliable by Track-It™ Extreme Temperature Loggers. Use a dual channel logger to record oven temperature as well as product temperature. Record precise temperatures for ideal results in heating and drying applications for research, clinical, industrial, or manufacturing needs.

Cold Storage Validation

Easily locate and remove portable self contained data loggers rather than complicated wiring using thermocouples for validation and long term monitoring of cold chambers, storage rooms refrigerators. Save time, money, and hassles with Track-It™ Extreme Temperature Loggers. Avoid loss of costly inventory from poorly monitored temperatures in refrigerators, freezers, and cold storage rooms and containers.

MONARCH INSTRUMENT
15 Columbia Drive
Amherst, NH 03031
Phone: (603) 883-3390
Fax: (603) 886-3300
www.monarchinstrument.com
sales@monarchinstrument.com

Find Quality Products Online at: www.GlobalTestSupply.com sales@GlobalTestSupply.com

Track-It™ Software

Track-It™ Software is a powerful Windows based software package that is included with every Track-It™ Data Logger. It allows for easy setup, retrieval, interpretation and export of the recorded data. Simply connect your Track-It™ data logger to an open USB port and begin communicating immediately. Point and click to select your sample interval, alarm set points, engineering units and recording triggers. Print a graph and use the many intuitive tools to analyze and manipulate the graph. Panel meters provide digital values. Period, XY Values, Delta measurements are all made easy to determine using the cursor functions.

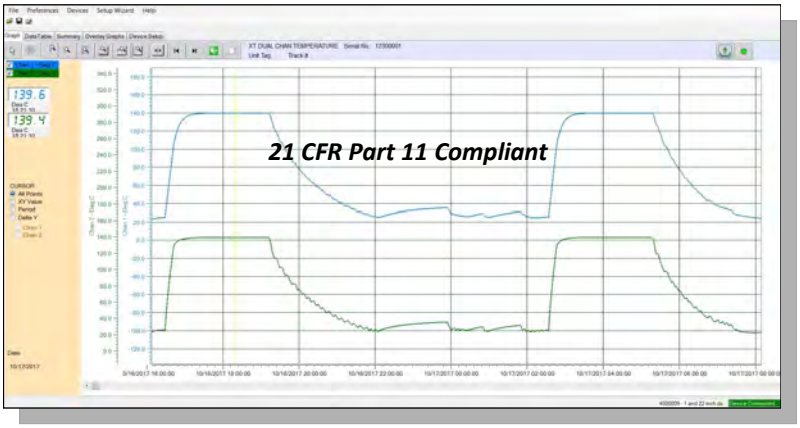

View Numerical data:

View a numerical data table or graphical representation of data readings relative to time. Use the graph cursor tools such as panel meter display, x-y value, period, or peak to peak. Zoom and stretch to examine and analyze the data and print a graphical report. From the data table view, see a summary containing min, max and average as well as Mean Kinetic Temperature. Export stored data to an Excel™ spreadsheet. Track-It™ Software also turns your PC into a real time data acquisition system by allowing you to stream live graphical or tabular data directly to your PC.

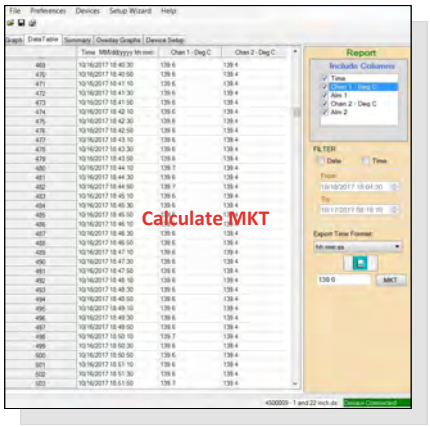

Extreme Logger PC Reader

Transfer data and configure the Extreme Logger using the PC Reader (connects via USB)

Validation Protocols:

Your written validation protocol is critical to the success of your business. Temperature sampling using the Extreme Track-It™ provides FDA approved records for all phases of your documented Validation Protocols.

Validation is easy and dependable using Track-It™ 21CFRP11 Software. Secure Password Log In ensures quick and easy IQ, OQ, PQ and process setup. FDA approved electronic data storage techniques are implemented throughout the design of the hardware and firmware in the Extreme Logger Series with and Track-It™ Software.

Track-It™ Extreme Loggers and Track-It™ Software are your path to easily enabled FDA 21CFR Part 11 compliance. All data is tamper proof and the password enabled security features provide all the protection you need for acceptance and trouble free reporting and ease during audits.

Track-It™
Extreme Temperature Data Loggers

Specifications

General

Record:	**Sample Rates:** User configured 1 every 2 seconds to 1 every 24 hours **No. of Samples:** 30,000
Record Trigger:	Multiple trigger modes: Instantaneous, on alarm, time and date (start and stop), day of week
Record Mode:	Fill to end of memory; cyclic, number of samples, time duration
Communication:	Interface Box to PC via USB 2.0 to USB mini (optional)
Alarms:	2 user programmable alarms. High or Low
Software:	Track-It™ Software - 21CFRP11 Compliant Program device, view data (historic or real time), export to Excel™ Simple and advanced modes
Battery:	1/2 AA Lithium Sulfuryl Chloride rated to 150°C Life: 1 year @ 1 minute sample rate
Dimensions:	1.43" (3.6cm) diameter x 2.3" (5.5cm) excluding probes Probes: 1" (2.5cm), 2" (5cm), 4" (10cm), 22" (56cm) Flexible Threaded Probes: M5 x 0.8
Weight:	7.3 ounces
Material:	316L Stainless Steel

Measurement

Temperature Range:	-50 to +150°C /-58 to 302°F Entire Logger -70 to +300°C / -94 to 572°F Probe Tip Only
Accuracy:	±0.25°C (-70 to -30°C) ±0.1°C (-30 to +150°C)
Probe Tip Only:	±0.25°C (150 to 300°C)
Resolution:	0.01°C / 0.02°F
Clock Accuracy:	± 1 minute/year
Pressure:	10 Bar Absolute

Ordering Information

Model Number	Description	Part No.
Extreme Track-It	Single Logger w/ 1" Smooth Probe	5396-1101
Extreme Track-It	Single Logger w/ 2" Smooth Probe	5396-1102
Extreme Track-It	Single Logger w/ 4" Smooth Probe	5396-1103
Extreme Track-It	Single Logger w/ 2" Threaded Probe	5396-1104
Extreme Track-It	Single Logger w/ 4" Threaded Probe	5396-1105
Extreme Track-It	Single Logger w/ 22" Bendable Probe	5396-1106
Extreme Track-It	Dual Logger w/ 1" Smooth, 22" Bend	5396-1120
Extreme Track-It	Dual Logger w/ 2" Smooth 22" Bend	5396-1121
Extreme Track-It	Dual Logger w/ 4" Smooth 22" Bend	5396-1122
Extreme Track-It	Duel Logger w/ Two 22" Bend	5396-1123
Docking Station	USB Reader for Extreme Logger	5396-9930

Dimensions

Rigid Probes

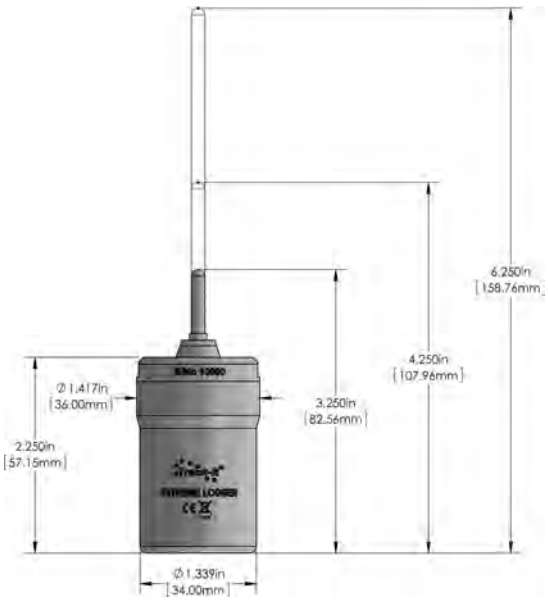

Threaded Rigid Probes

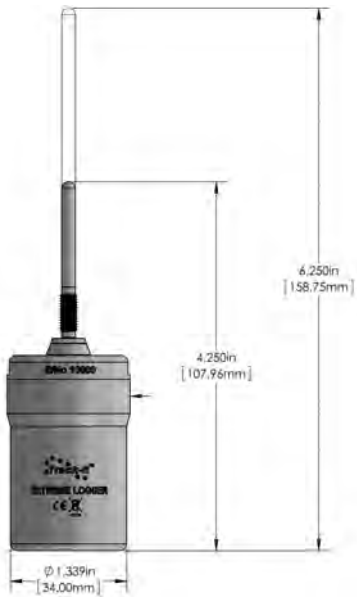

Dual logger with 22" bendable and 1" rigid