# POTENTIAL TRANSFORMERS

## THREE PHASE VOLTAGE TRANSFORMER — *MODEL* 3VTN

POTENTIAL TRANSFORMERS

**600V CLASS**

### FEATURES

- UL Recognized
- Three transformers in one case
- The core and coil assembly is encased in a thermoplastic shell and filled with resin.
- The transformer has a clear plastic terminal cover.
- Designed for Line to Neutral Connections

® E93779 ® LR89403

3VTN

### SPECIFICATIONS

Frequency ..... 60Hz
Standard Secondary Voltage ..... 120 Volts L-N
Accuracy Class (per phase) ..... 0.6 W, 1.2 X at 60Hz
Thermal Rating (per phase) ..... 150VA at 30°C Amb.
100VA at 55°C Amb.
Operation (fused) ..... Line-to-Neutral
Secondary Fuses ..... BBS
Insulation Level ..... 0.6kV, 10kV BIL Full Wave
Terminals ..... Brass Screws No. 8-32 UNC
Weight ..... Approximately 24 Lbs.

**APPLICATION AND ORDERING DATA**

| CATALOG NUMBER | LINE TO NEUTRAL VOLTAGE RATING | TURNS RATIO | PRIMARY FUSE KTK-R | SECONDARY FUSE BBS (250V) |
|---|---|---|---|---|
| 3VTN-460-069F | 69.3:120 | 0.58:1 | 5.0A | 1.6 AMPS |
| 3VTN-460-120F | 120:120 | 1:1 | 4.0A | |
| 3VTN-460-240F | 240:120 | 2:1 | 2.0A | |
| 3VTN-460-277F | 277:120 | 2.31:1 | 2.0A | |
| 3VTN-460-300F | 300:120 | 2.5:1 | 1.5A | |
| 3VTN-460-346F | 346:120 | 2.88:1 | 1.5A | |
| 3VTN-460-069FF | 69.3:120 | 0.58:1 | 5.0A | 1.6 AMPS (Included) |
| 3VTN-460-120FF | 120:120 | 1:1 | 4.0A | |
| 3VTN-460-240FF | 240:120 | 2:1 | 2.0A | |
| 3VTN-460-277FF | 277:120 | 2.31:1 | 2.0A | |
| 3VTN-460-300FF | 300:120 | 2.5:1 | 1.5A | |
| 3VTN-460-346FF | 346:120 | 2.88:1 | 1.5A | |

**NOTE:** Only ground N & n terminals if source is 3-phase, 4 wire effectively grounded.

* Rec. Primary Fuse
F = Primary Fuse Block Provided
FF = Primary & Secondary Fuse Blocks Provided

### CONNECTION DIAGRAM

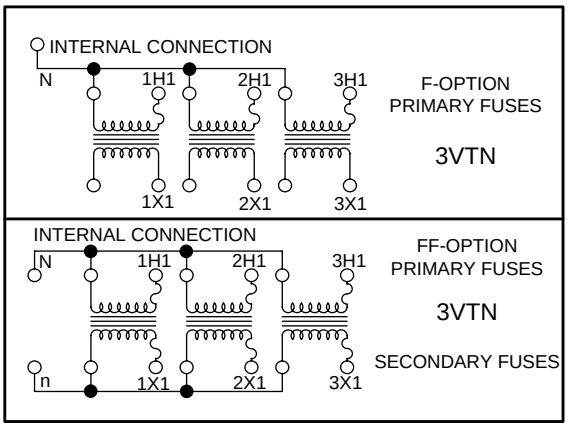


### DIMENSIONS

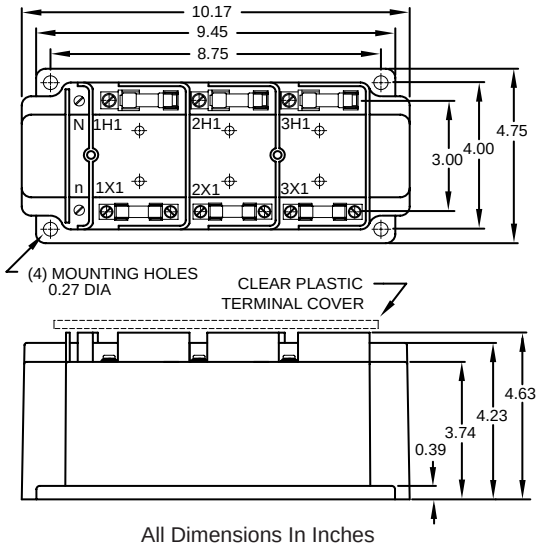


All Dimensions In Inches

**FLEX-CORE®**
**Div. Morlan & Associates, Inc.**

**Find Quality Products Online at:** www.GlobalTestSupply.com sales@GlobalTestSupply.com