Ref No,103-04A-2003-DEC

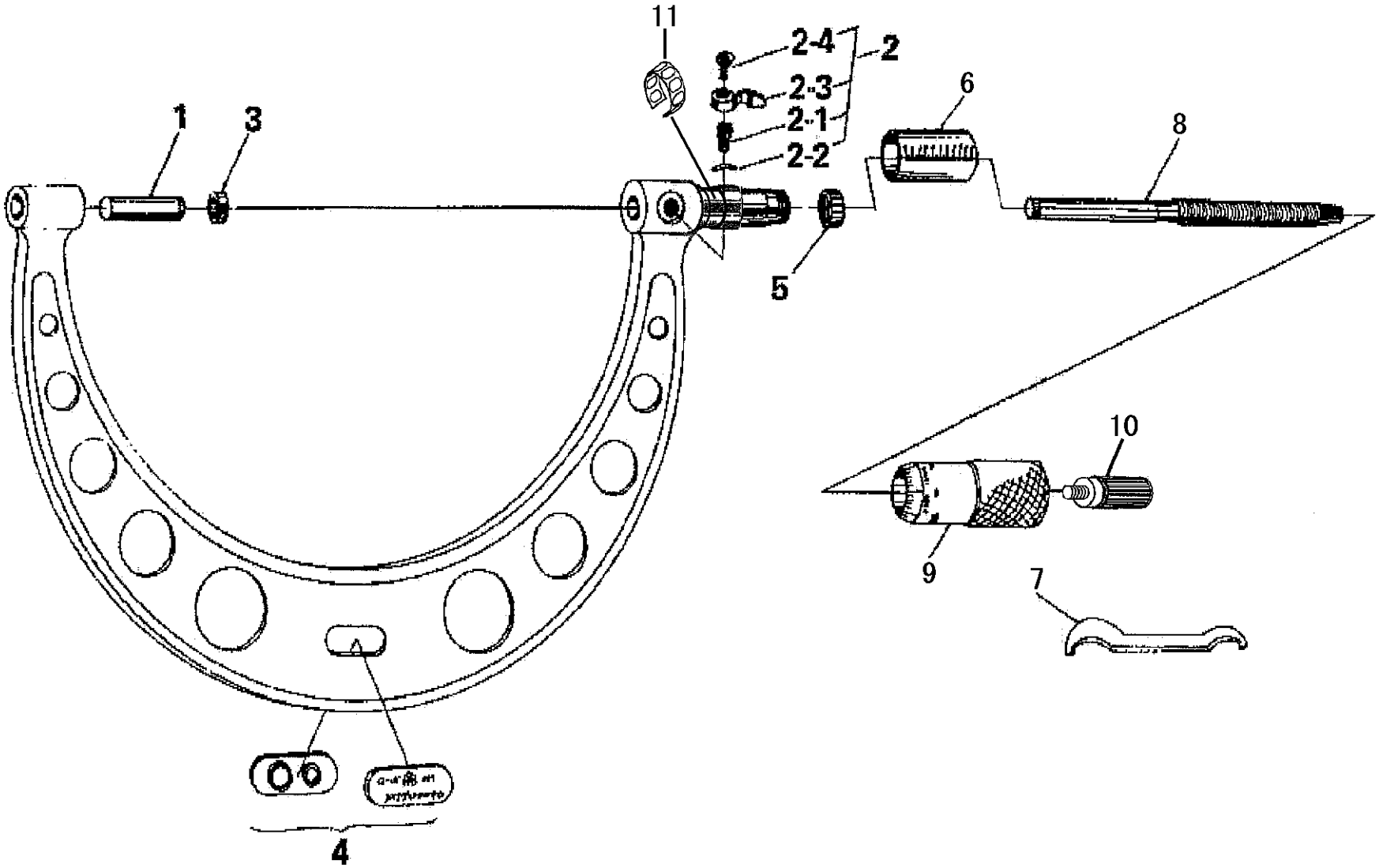

Find Quality Products Online at: www.GlobalTestSupply.com sales@GlobalTestSupply.com

Find Quality Products Online at: www.GlobalTestSupply.com sales@GlobalTestSupply.com

103-04

ブヒンメイ	PART NAME	販売区分 CATEGORY	CODE NO. コードNO.						備考 COMMENTS
			103-149 (OM-325)	103-150 (OM-350)	103-151 (OM-375)	103-152 (OM-400)	103-153 (OM-425)	103-154 (OM-450)	
			103-189 (OM-13")	103-190 (OM-14")	103-191 (OM-15")	103-192 (OM-16")	103-193 (OM-17")	103-194 (OM-18")	
ｱﾝﾋﾞﾙ	ANVIL	Y1	200822						
ｸﾗﾝﾌﾟｸﾐﾀﾃ	CLAMP ASSY		950063						
ｸﾗﾝﾌﾟﾈｼﾞ	CLAMP SCREW		200422						
ｽﾌﾟﾘﾝｸﾞﾜｯｼｬ	SPRING WASHER		200420						
ｸﾗﾝﾌﾟﾊｼｭ	CLAMP HANDLE		200426						
ﾄﾒﾈｼﾞ	SETSCREW		200424						
ｱﾝﾋﾞﾙｶﾗｰ	COLLAR,ANVIL	Y1	200704						
ﾈｰﾑﾌﾟﾚｰﾄｸﾐﾀﾃ(ﾐﾘ)	NAMEPLATE ASSY(MM)		950630	950631	950632	950633	950634	950635	
ﾈｰﾑﾌﾟﾚｰﾄｸﾐﾀﾃ(ｲﾝﾁ)	NAMEPLATE ASSY(INCH)		950208	950209	950210	950211	950212	950213	
ﾃｰﾊﾞﾅｯﾄ	NUT,ADJ	Y	200153						
ｶﾞｲﾄｳ(ﾐﾘ)	SLEEVE(MM)	Y1	200790	200791	200792	200793	200794	200795	
ｶﾞｲﾄｳ(ｲﾝﾁ)	SLEEVE(INCH)	Y1	204695						
ｽﾊﾟﾅ	SPANNER		200154						
ｽﾋﾟﾝﾄﾞﾙ(ﾐﾘ)	SPINDLE(MM)	Y1	200150						
ｽﾋﾟﾝﾄﾞﾙ(ｲﾝﾁ)	SPINDLE(INCH)	Y1	200149						
ｼﾝﾌﾞﾙ(ﾐﾘ)	THIMBLE(MM)	Y1	200375						
ｼﾝﾌﾞﾙ(ｲﾝﾁ)	THIMBLE(INCH)	Y1	200376						
ﾗﾁｪｯﾄ	RATCHET STOP		04GZA243						
ﾊﾞﾈﾘﾝｸﾞ	SPRING	Y1	307773						
【包装資材】	【PACKING】								
ｶｸﾉｳﾊﾞｺ	HOUSING CASE		470297	470298	470299	470300	470301	470302	
ﾀﾞﾝﾎﾞｰﾙｹｰｽ	CARDBOARD CASE		471144		471145		471146		